Ref: Document I-168

INSTALLATION INSTRUCTIONS
SCOTT 3200 TAIL WHEEL FOR CESSNA 120, 140 & 170 AIRCRAFT

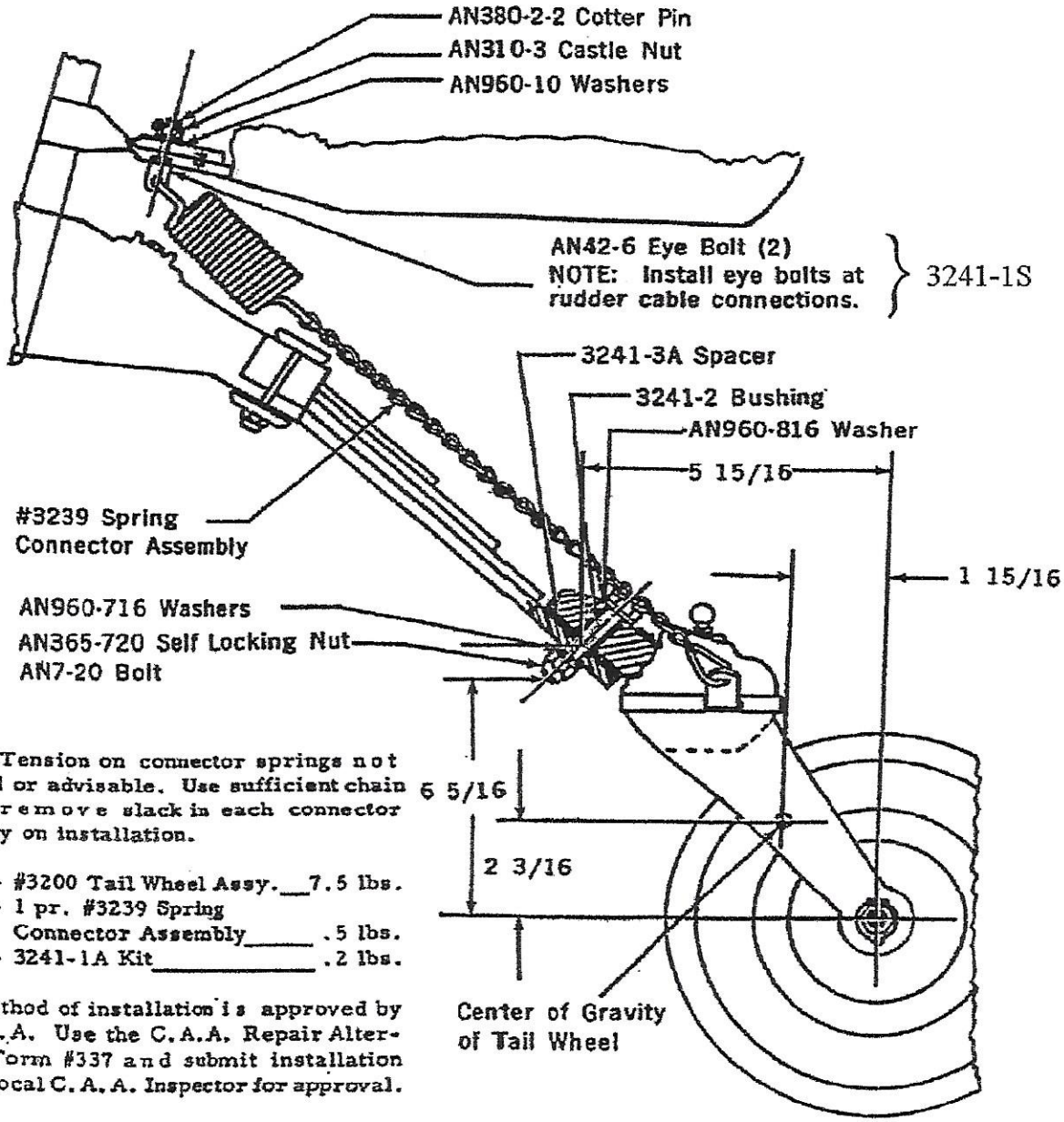

NOTE: Tension on connector springs not required or advisable. Use sufficient chain links to remove slack in each connector assembly on installation.

Weight - #3200 Tail Wheel Assy.__7.5 lbs.
Weight - 1 pr. #3239 Spring Connector Assembly_____ .5 lbs.
Weight - 3241-1A Kit_____ .2 lbs.

This method of installation is approved by the C.A.A. Use the C.A.A. Repair Alternation Form #337 and submit installation to your local C.A.A. Inspector for approval.